AI-DRIVEN PLATFORM GUIDING PADDY FARMERS ACROSS THE FULL CULTIVATION LIFECYCLE

Project ID: 25-26J-242

Project Proposal Report

Wijesinghe M.D.C.M
IT22330932

BSc (Hons) in Information Technology Specializing in Information Technology

Department of Information Technology

Sri Lanka Institute of Information Technology
Sri Lanka

August 2025

CROP ESTABLISHMENT PLANNER FOR NEW FARMERS

Project ID: 25-26J-242

Project Proposal Report

BSc (Hons) in Information Technology Specializing in
Information Technology

Department of Information Technology

Sri Lanka Institute of Information Technology
Sri Lanka

August 2025

DECLARATION

DECLARATION

We declare that this is our own work, and this proposal does not incorporate without acknowledgement any material previously submitted for a degree or diploma in any other university or Institute of higher learning and to the best of our knowledge and belief it does not contain any material previously published or written by another person except where the acknowledgement is made in the text.

Name	Student ID	Signature
Wijesinghe M.D.C.M	IT22330932	Chamika

The above candidates are carrying out research for the undergraduate Dissertation under my supervision.

..... 31/08/2025

Signature of the supervisor: Date:

ABSTRACT

Crop establishment is one of the most vital steps in agriculture, as it has the greatest potential to impact crop yield, income, and sustainability for the future. In Sri Lanka, numerous novice and smallholder farmers assume the burden of deciding what to crop, when to crop, and how to best utilize resources. Most of the advisory systems that are available today give general and broad advice, and not a client specific advice that is based on individuals' conditions e.g., soil fertility, rainfall variability, water availability, and market demand, leaving farmers with the constant challenge of crop failures, lower income, and inefficient use of inputs. This component of the research entails the undertaking of creating an AI-driven mobile app with a step-wise crop establishment planning service geared ultimately to beginning farmers. The proposed system has the capability to utilize various data to ultimately provide farmers near-infinite customized and relevant recommendations -- for example, using data sources that include the soil data, climate trends, irrigation information, and local market information about each region. The app will utilize sophisticated machine learning techniques to analyze and extract predictive information from data sources, while recommending tailored information on what types of crops to grow, best planting times, and advice about resource allocation for crops. All of this empowers farmers to make informed decisions that also mitigate risk as well as increasing productivity. The proposed solution will further assist in increasing the efficiency of the agricultural sector and also afford rural farming communities access to the most up-to-date technological supports that are relevant, practical and useful.

Keywords**:** Crop Establishment, Precision Agriculture, Machine Learning, Smart Farming

Table of Contents

DECLARATION…….i

ABSTRACT……...ii

TABLE OF CONTENTS……...iii

LIST OF FIGURES……...iv

LIST OF TABLES……..v

LIST OF APPENDICES……vi

LIST OF ABBREVIATIONS……...vii

1 INTRODUCTION .....- 1 -

1.1 Background & Literature survey .....- 2 -

1.2 Research Gap .....- 5 -

1.3 Research Problem .....- 6 -

2 OBJECTIVES .....- 8 -

2.1 Main Objectives .....- 8 -

2.2 Specific Objectives .....- 8 -

3 METHODOLOGY .....- 10 -

3.1 System Architecture .....- 11 -

3.1.1 Software Solution.....- 14 -

3.1.2 Commercialization.....- 15 -

3.1.3 Future Scope .....- 17 -

4 PROJECT REQUIREMENTS.....- 18 -

4.1 Functional requirements.....- 18 -

4.2 Non-functional requirements .....- 18 -

4.3 System requirements.....- 18 -

4.4 User Requirements.....- 19 -

4.5 WireFrames.....- 20 -

5 GANTT CHART.....- 23 -

6 WORK BREAKDOWN CHART .....- 24 -

7 DESCRIPTION OF PERSONAL AND FACILITIES .....- 25 -

8 BUDGET AND BUDGET JUSTIFICATION .....- 26 -
9 REFERENCES .....- 27 -
10 APPENDICES .....- 29 -

LIST OF FIGURES

Figure 3.1-1 Overall system diagram…….....11

Figure 3.1-2 Crop Establishment Planner System Architecture.……12

Figure 3.1.1-1 Sequence diagram of Crop Establishment Plan……14

Figure 3.1.1-2 Use Case Diagram of Crop Establishment Plan……...15

Figure 4.5-1 Dashboard……20

Figure 4.5-2 Input Planner……20

Figure 4.5-1 Crop Recommendation…….....21

Figure 4.5-4 Farming Calander……22

Figure 4.5-5 Profitability Simulation…….....22

Figure 5-1 Gannt Char…….23

Figure 6-1 Work Breakdown Chart…….24

LIST OF TABLES

Table 1.2-1 Comparison of former research……...5

Table 8-1 Budget Table…….....26

LIST OF APPENDICES

Appendix A: Plagiarism Report…….....29

LIST OF ABBREVIATIONS

Abbreviation	Description
AI	Artificial Intelligence
ML	Machine Learning
GIS	Geographic Information System
GSSAT	Decision Support System for Agrotechnology Transfer
API	Application Programming Interface

1 INTRODUCTION

Agriculture is an essential factor in the continual evolution of national development in Sri Lanka, providing food security, employment opportunities, and various cultural continuity for rural communities. Within agriculture, paddy cultivation is essential in providing livelihoods for millions and provides much of the country's national food consumption diet and national economy [1][2]. However, despite paddy cultivation being important historically, the initiation of paddy crops has become more difficult for new farmers, hopefully smallholder farmers, with limited capital and technical skills, faced with more uncertainty about what paddy variety to select and the cultivation practices to adopt. Climate variation, soil degradation, unpredictable rainfall, and fluctuating market have magnified the degree of uncertainty current systems of decision-making have become inadequate [3].

Usually, traditional agricultural advisory systems (i.e. extension services) (region-based) advisory systems provide high-level general advice on when to plant paddy, the variety to use or recommended crop, frequency of watering, fertilizer options, etc. Usually, this general advise is useful to these farmers, however, it may not be specific enough to the unique circumstances of every farmer such as soil fertility of their land, preferred irrigation type, rainfall, special soil conditions, microclimate, etc. In particular for many beginning farmers - generalized or non-specific advice is often not useful because the advice does not match with the individual and their agricultural crop choices, skills and knowledge, which results in different crop choices, low-yield/poor failure of crops, loss of interest, and so on [4].

Worldwide, digital agriculture has started to address common challenges in digitalizing agriculture through the uses of Artificial Intelligence (AI), machine learning, geospatial data, and crop simulation models. These technologies have

shown a clear record of real-world data to enable informed planning of crop establishment, optimized input efficiency, and minimization of risk [5][6]. Nonetheless, there is not currently a farmer accessible digital integration for the paddy sector in Sri Lanka that has taken new technological advances and placed them in an integrated and personalized approach to decision support. The AI-enabled Crop Establishment Planner provides solutions by presenting recommended actions from specific soil, water, weather, and market data from farmers. It allows farmers to choose appropriate crop varieties for their situation while producing adaptive farming calendars, intelligent input requirements, and profitability simulations [7][8]. The greater need is to help new farmers mitigate risk and make decisions to engage with more certainty when considering paddy cultivation, contributing to food security and economic resilience in rural areas [9].

1.1 Background & Literature survey

Background

The agricultural sector in Sri Lanka has always depended on paddy, cultivated for thousands of years. While finishing as an important contributor to the national GDP and employed a large part of the rural labor force it is beset with structural dilemmas — land fragmentation, lack of resources, a changing climate having increasing impacts upon rural livelihoods [10]. Variability in rainfall patterns during the monsoon season, seasonal droughts, and flooding have added new constraints and uncertainty on crop establishment and made it difficult for new farmers to commence a career with confidence [11].

For new entrants, crop establishment represents the highest point of vulnerability during the cropping season. The following decisions are made prior to or during crop establishment: decisions on land preparation, variety of seed, time of planting, and resource allocation. The key decisions that shape overall yields and profit are decided primarily with inadequate knowledge and scientific input. Farmers often

rely on their own personal experience, the experience of their neighbors or sporadic advice from an extension officer and often without consideration of the unique combination of soil characteristics, available irrigation resources and financial capacity each individual farmer has available to them [12].

Government agencies and research organizations have tried to meet these challenges through training courses, task subsidies, and general advisory services. While these strategies have assisted in maintaining production at the national level, this form of assistance does not provide the finer grain, farm-specific advice that farmers need to establish a crop [13]. The perception of farming moreover remains low among youth populations, framed by their view of farming as financially unworthy and high risk. For many youth farmers - especially those without family background on a farm, unreliable decision-support discourages participation in paddy establishment, or paddy growing entirely [14].

With that in mind, a personalized planner powered by an AI decision-support platform could greatly enhance the process of decision-making in sustainable paddy cultivation. Through the process of matching crop with soil fertility, irrigable water, and demand at the time a farmer wants to purchase or plant a crop, will help get rid of uncertainty, enhance profitability, and provide pathways for new farmers to gain confidence as participants in sustainable paddy cultivation [15].

Literature Survey

Over the past few years, scholarly and applied research in digital agriculture has shed light on the potential for AI and decision support systems (DSS) to transform farming practices. DSS simulation models have been used, notably the Decision Support System for Agrotechnology Transfer (DSSAT), to simulate crop development under different climatic and soils conditions, allowing researchers and decision-makers to assess planting conditions in advance and develop better resource planning or yield maximization [16]. DSS crop and agricultural

production models and systems have a strong history of development and use for forecasting growth and yield, however, they have also generally failed to be relevant and accessible to smallholder farmers that may not have the means nor experience to interpret the parameters produced in models.

Similar advancements have been made in stimulating and studying the use of market information in agricultural decision-making. Studies centered on maize and wheat have highlighted the importance of real-time, previous production seasons price data in together with crop advisory decision-making systems so to optimize farmers decisions. Matching production intentions to probable demand mitigates market risk, and farmers can cultivate crops that will yield a positive return based on production forecasts that consider previous seasonal price possibilities [17]. Despite this progress within the realms of maize and wheat in parts of South Asia, major rice-producing regions such as South Asia have hardly any market-oriented decision support systems. Understanding the needs of local market supply and demand is one challenge that participative decision support systems are still evolving with reasonable representation of market demand in smallholder agricultural regions.

Machine learning techniques have also been applied to several agricultural tasks, like a soil fertility classification, irrigation scheduling, and fertilizer recommendation. These applications exemplify greater accuracy and efficiency when compared to conventional extension practices [18][19]. Concurrently, ICT-based platforms for climate-smart agriculture have been piloted across the region. Each of these platforms provides weather-based alerts and seasonal advisories; however, most continue to be generic with no customized advice specific to individual farmers' situations [20][21].

Altogether, these studies highlight the growing influence of data-driven agriculture. However, they also highlight a gap regarding new paddy farmers in Sri Lanka, while existing models, each of which address one dimension (crop simulation, price forecasting, and soil management), none come together as an all-

encompassing, personalized solution that addresses agronomy, economics, and environmental sustainability. The planned Crop Establishment Planner is unique in that it integrates these aspects into a single easy-to-use platform.

1.2 Research Gap

Table 1.2-1 Comparison of former research

Research	Soil & Weather Fit	Market Demand Forecast	Profitability Simulation	Personalized Recommendations	Climate Resilience Scoring
DSSAT Crop Simulation [16]	✓	✗	✗	✗	✓
ICT-based Agro-Advisory in India [20]	✓	✗	✗	✗	✗
AI Soil Fertility Classifier [18]	✓	✗	✗	✗	✗
Price-aware DSS for Maize [17]	✗	✓	✗	✗	✗
Proposed System (Crop Establishment Planner)	✓	✓	✓	✓	✓

While research into agricultural decision-support systems has evolved significantly, the bulk of solutions are too broad or too piecemeal for practical application by new paddy farmers. Many platforms focus on agronomics, such as soil fertility or crop simulation and perhaps understandably, fail to incorporate relevant economic aspects like forecasting market demand and reasonable profitability [22]. Others, amongst their many promises, rely on high levels of technical literacy, rendering them inappropriate for smallholders, who, as researchers note are not expert users of these decision-support tools, especially when it comes to interpreting data or calibrating models [23].

Genuinely few systems have attempted to integrate geospatial profiling with adaptive planning calendars and context-aware and market-aware

recommendations [23]. Farmers, particularly novice farmers, need decision-support systems that don't just simulate potential outcomes, they need tools that can walk them through the cultivation process stepwise. They also need recommendations that incorporate both their resource constraints, and what the implications would be of cultivating in their local environment. Yet, decision-support tools are not designed to seamlessly integrate GIS linked land profiling, weather adaptive crop matching, profitability simulations, and user-personalized input planning within one decision-support platform [24].

The identified gap underscores the pressing call for a personalized, end-to-end crop establishment planner that specifically targets new and smallholder farmers. Unlike other systems, this proposed service platform will not view paddy farming as a 'one-size-fits-all' process. It will look at the relevant options based on the farmer's real soil and water resources, use real-time and historical market demand and some amount of resilience-based crop scoring to prepare for climate uncertainty. By addressing the gap, we can also help ensure first-time farmers have a slightly more secure, more confident, and more sustainable long-term entry into agriculture.

1.3 Research Problem

While the cultivation of paddy has remained one of the most important agricultural tasks in Sri Lanka, new and smallholder farmers face uncertainty in the process of crop establishment. At present, these farmers do not have access to an individualized, personalized, and AI-supported platform that can assist farmers in knowing which paddy varieties would be suitable for cultivation, the correct crop establishment period and how to manage inputs. Farmers have the benefit of traditional advisory systems, from government extension agencies and agricultural agencies, that are usually broad based and regionalized that gives some recommendations but are not representative of the highly specific conditions to the individual farmers. Furthermore, these advisory recommendations similarly do not consider important variables such as soil properties, irrigation availability, market

price structures (Lamey, 2018), climate variability which can lead farmers to the wrong crop choices and unpredictable yields [25][26].

The lack of precision has direct consequences for profitability. New farmers may also have less experience balancing agronomic considerations with financial considerations while being more likely to have losses from inappropriate crops or schedules for their land. This is also a situation where the risks are increasing due to climate change since traditional ways of making decisions based on seasonal cycles are undermined by unpredictable monsoons, droughts and floods. Without access to personalized recommendations, farmers are reduced to guesswork or informal advice to inform their decisions, and it is often inadequate in an ever-changing environment where they could be working to lower risk and be financially stable. This requires financial pressures that result in adopting minimal modern practices and even have some youth step away from agriculture practices as a sustainable way of living. The research problem is the absence of an AI-driven, personalized crop establishment planning utility that brings soil, climate, water, and market demand insights onto a single platform to substantiate the decision making process of first time paddy farmers to ensure resilient and profitable decisions.

2 OBJECTIVES

2.1 Main Objectives

The primary goal of this study is to design and build an AI-powered Crop Establishment Planner which gives new farmers in Sri Lanka a comprehensive and data-driven decision-support system for paddy cultivation. The planner will provide not only recommendations for paddy varieties based on soil suitability, water availability, and climatic conditions but will also include real time and historical market demand in order to optimize the profitability of any decision. The planner builds on data on crop growth simulations, geospatial profiling, and financial modeling and aims to build a platform that helps to eliminate uncertainty, increase confidence, and allows farmers to plan in a clear and focused way. This will build the resilience of the rice sector in Sri Lanka whilst simultaneously allowing new farmers the tools to view agriculture as a viable and profitable way of making a living.

2.2 Specific Objectives

Particular aims of this study are in best practices for crop recommendation systems that incorporate multiple aspects of contemporary precision agriculture. One primary aim is to identify and recommend the paddy varieties that are best suited to the soil fertility, irrigation patterns, and field of the individual farmer, which ensures that recommendations are made in reality and not based on generalized assumptions. A second aim is to use current and past market demand data in making recommendations, so that farmers can be encouraged to grow varieties that thrive in their location and meet consumer demand and provide better resale opportunities.

Generating adaptive farming calendars is another vital goal. The farming calendars would lay out clear start-to-finish schedules for farmers to take action on planting, irrigating, applying fertilizers, and harvesting, while automatically adapting and

updating respective actions based on weather forecasts and rainfall predictions. With respect to profitability, the system will develop a profitability simulator that allows for modeling multiple crop scenarios based on input costs, yield expectations, and potential revenue scenarios. This financially-based knowledge allows farmers, especially those with limited capital, to determine their best options before spending any capital technology-related resources. Additionally, an identical climate resilience scoring feature would allow the system to rate crop varieties and ensure risk-based considerations of factors such as flood, draught, and pest balance for farmers. Finally, the project will develop a smart input planner that will automatically calculate volumes of seeds, fertilizers, and pesticides to be applied to a given size and condition of field. This will lead to reduced residue, less cost, and more sustainable agricultural input use; ultimately helping farmers with optimizing production and increasing project efficiency.

3 METHODOLOGY

The method of executing this research is to develop a comprehensive crop establishment planner using data-driven modeling, geospatial analysis, and artificial intelligence. To do this, three distinct stages are defined for the project. The first stage focuses on the compilation of datasets. We collected datasets from numerous sources that included soil maps, total rainfall, historical rainfall, climatic and weather forecasts, irrigation availability, and historical market prices from respective national agricultural and meteorological agencies. These datasets then formed the bases for system development. The second stage is to apply machine learning to classify soil fertility; predict irrigation potential; and recommend varietal suitability as a function of soil properties. The researchers used known crop models (DSSAT) to simulate crop growth under a range of conditions, thereby enabling the system to provide yield estimates and suitable planting windows. The third stage analyzed historical time-series market data (ARIMA and LSTM) in order to predict price fluctuations related to demand for rice varieties.

The information is presented on an easy-to-use interface for both mobile and web-based platforms. The design considerations include ensuring that smallholder farmers can access the platform mobile and web-based interfaces offline regardless of location, as well as consideration for technical limitations of the users—including offline caching of data and simplified interfaces. The platform's performance is constantly evaluated through field trials with introductory farmers in different parts of Sri Lanka. Responses provided from on-site trials with new users will support algorithms improvement and the overall usability of the program—to ensure the product meets the needs of the product and is usable, accurate, and practical for its intended user.

3.1 System Architecture

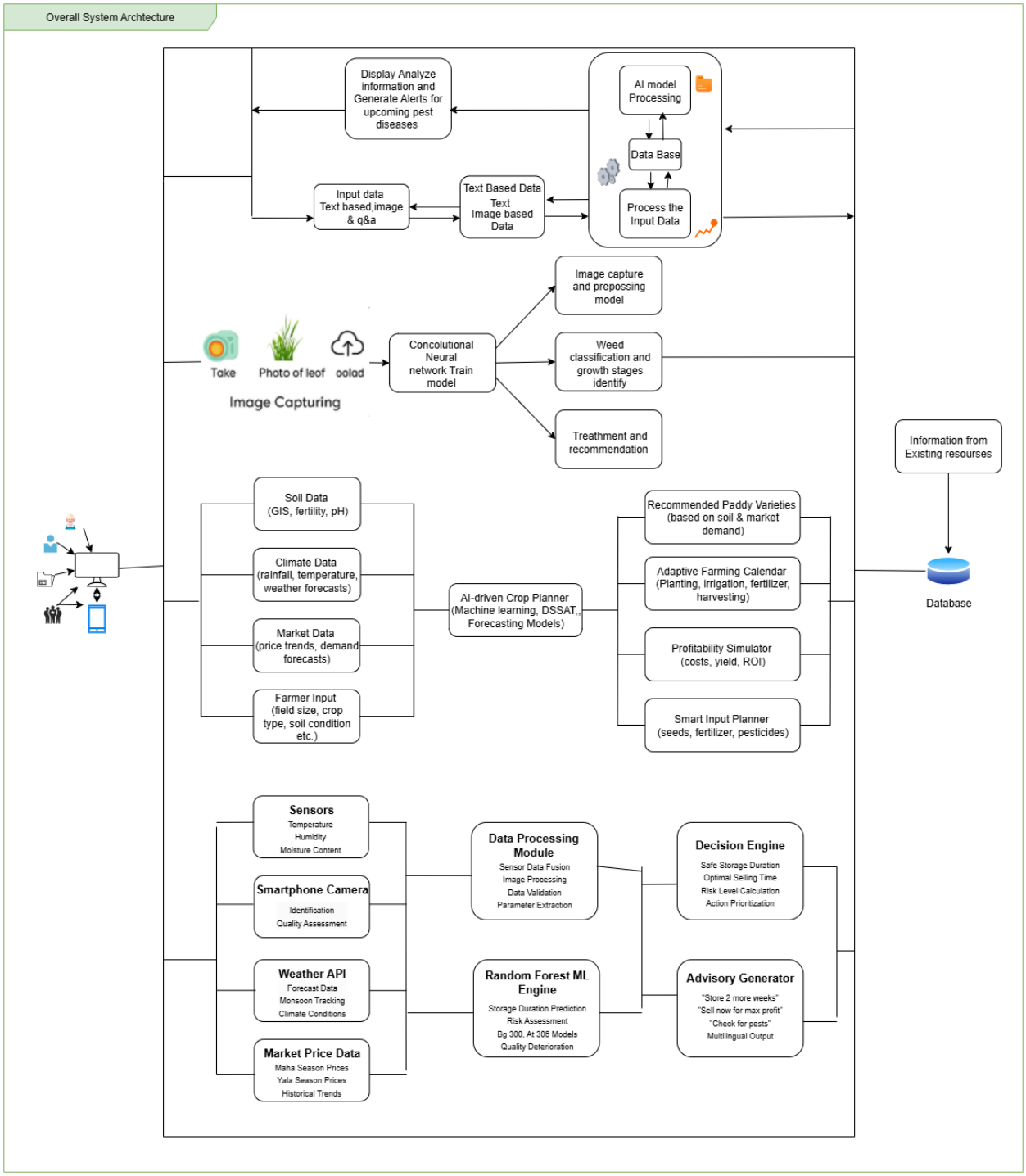

Figure 3.1-1 Overall system diagram

The system will be characterized by four dedicated AI-based modules created by the members of our team: a Crop Establishment Planner, which will welcome new

farmers; an AI-based Weed Detection and Stage Identification component, which will identify weeds and crop growth phases with the help of image processing; a Pest Attack Forecasting system, which will send early warnings and make them avoid it; and an AI-based Post-Harvest Advisor, which will optimize activity after harvest. These modules have a coordinated relationship, sharing data and insights via a centralized database and processing engine.

The platform is an actionable recommendations platform enabling farmers to receive optimal planting schedules, suggested paddy types in accordance with the soil and market conditions, intelligent encouragement of the application of fertilizers and pesticides, and simulated calculations of profits. This integrated solution can enable farmers to maximize the value of their paddy crop and reduce risks and maximize their investment using data-driven insights by combining real-time monitoring, predictive analytics, and expert advisory systems in the entire paddy cultivation process.

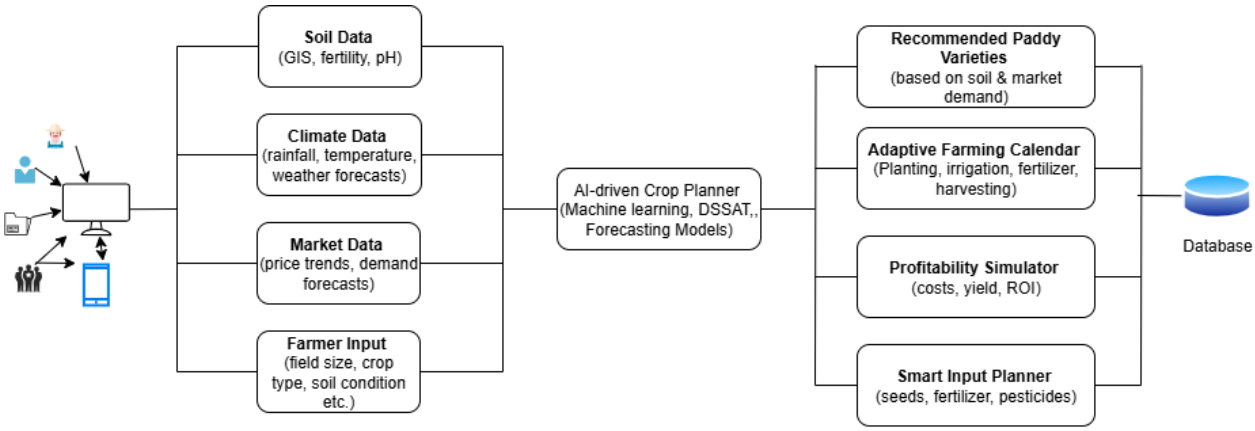

Figure 3.1-2 Establishment Planner System Architecture

The proposed AI-driven Crop Establishment Planner will be a source of accurate, personalized, and data-driven support to enable farmers to make better decisions. To start it requires data to be collected on multiple data sources, this includes: soil conditions (i.e. fertility, pH, GIS map), climate data (i.e. temperature, rainfall,

weather forecast), market data (i.e. demand forecasts and price forecasts), and farmer data (i.e. land size, crop type & conditions of the field).

All of these inputs would be pulled together and put through the AI Crop Planner. The AI Crop Planner uses machine-learning models, scenario analyses using the Decision Support System for Agrotechnology Transfer (DSSAT) and empirical forecasting methods to provide adaptable and reliable suggestions. The architecture is developed through 4 modules:

1. The Recommended Paddy Varieties module would evaluate the crops based on the soil and market data pulled from the previous sourced data.
2. The Adaptive Farming Calendar would provide a stage-wise timeline to the farmers on what to do for each of the predicted stages: planting, irrigation, and harvesting for each season if the farmers had their crops established.
3. The Profitability Simulator provide predictions of yield, costs (of inputs) and revenues (final return on investment).
4. The Smart Input Planner would allow the farmers to input data on the number of seeds planted, types and amounts of fertilizer added, quantities and types of pesticide application, and would evaluate the smart way to use agricultural inputs.

Output data is available through a central repository creating continuity knowledge over time so that farmers have access at will, for analysis, and for future training and learning models. In summary, the farmers will have a real, technology based, crop establishment planning tool which allows for the hugs and challenges of traditional practice to come together with precision agriculture.

Tools and Technologies

- Python for Data Processing and Analysis
- Pandas and NumPy for Agricultural Data Handling
- Weather and Soil Data APIs for Real-time Information
- GIS Tools (QGIS/ArcGIS) for Soil and Land Analysis
- Firebase for Authentication and Notifications

- Cloud Services (AWS/ Google Cloud/ Azure) for Hosting and Scalability
- GitHub/ GitLab for Version Control and Collaboration
- React Native

3.1.1 Software Solution

system and software design documents

After requirement gathering and feasibility study, we are moving on to the designing phase. In this phase software documents related to the system design is created.

Sequence Diagram

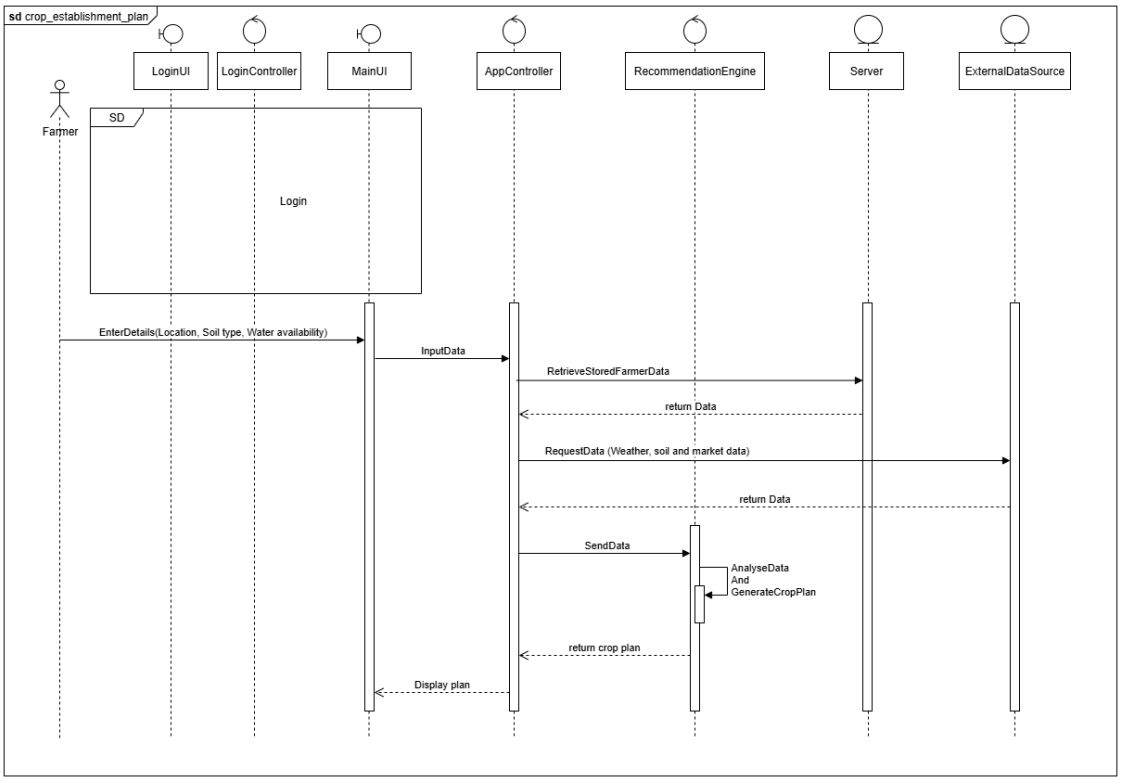

Figure 3.1.1-1 Sequence diagram of Crop Establishment Plan component

Use Case Diagram

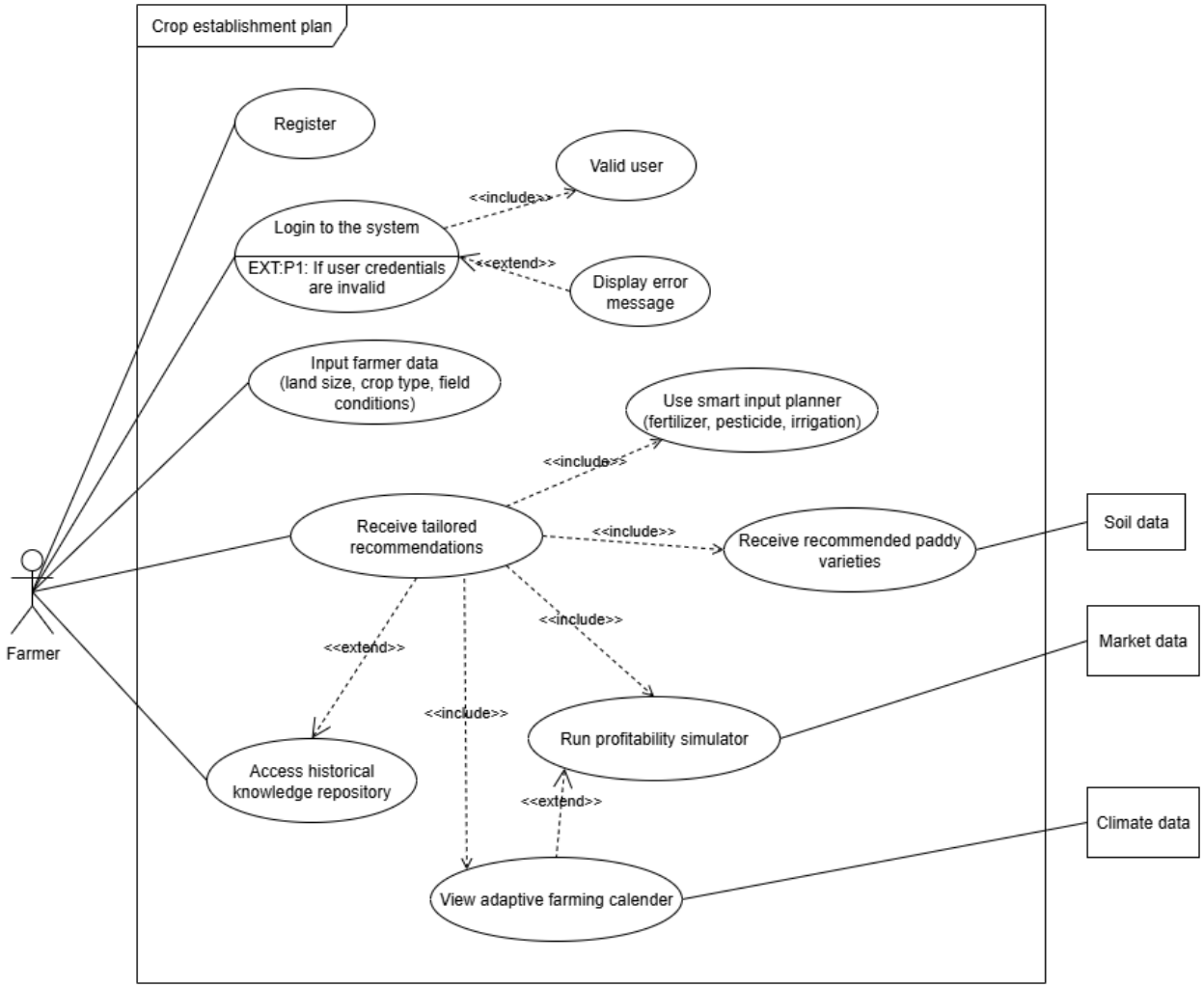

Figure 3.1.1-2 Use Case Diagram of Crop Establishment Plan component

3.1.2 Commercialization

The Crop Establishment Planner is intended as an important tile in moving this research from a prototype concept to a platform that is widely used by farmers in Sri Lanka. The Crop Establishment Planner will be developed as a mobile and web application to reach the greatest number of users. The platform will consist of a tiered level of use, with the basic features (such as soil-fit crop recommendations, adaptive farming calendars, etc.) offered as free from the outset to help entice first-

time users. The premium features (simulations of profitability, market aligned crop recommendations, climate resilience score, smart input planning, etc.) will be provided through a subscription-based model. Users will primarily be newer and smallholder farmers, but the platform could also serve cooperatives, agricultural extension officers, research partners in Sri Lanka and possibly microfinance institutions seeking reliable data to support agri-loans. By aligning commercialization with multiple stakeholders, including the sustainment of agri-stakeholders, the planner would establish a sustainable revenue model, while delivering tangible value for all parties in the production ecosystem. The plan is that funding for the first deployment will come from collaborative partnerships with agricultural development projects, NGOs, or other organizations, and possibly through government grants that become available to support digital agriculture interventions. After deployment, the crop planner would earn income from subscriptions, partnerships with agri-input suppliers, or agri-fintech platforms.

Commercialization Strategy:

The commercialization model relies on scalability, accessibility, and trust within rural communities. Our focus will be on building partnerships with the Department of Agriculture, local cooperatives, and rural development banks. These organizations have the potential not only to lend credibility to the platform, but also provide introductions for outreach and training farmers. Because the platform will be presented as an inclusive, farmer-friendly option that requires no prior knowledge or experience, both older farmers and digitally literate youth will find the platform suitable.

Stroke campaigns will be instigated at agricultural fairs, local radio programs, and demonstrations in farmer training centers, thereby ensuring visibility at the grassroots level. A critical piece to this strategy will be establishing trust through pilot programs that allow farmers to experience the benefits without needing to spend money. The integration of subsidies from government programs and

partnerships to create microfinance to support uptake will bring further performance. Partnerships with agri-businesses and buyer networks will present opportunities to position the platform as not only a crop planner, but a conduit for securing markets that enhance the commercial appeal of the platform for long-term viability.

3.1.3 Future Scope

In the longer term, there is potential for the Crop Establishment Planner to progress to a wider digital ecosystem capable of providing support for many aspects of smart agriculture. Future development could include IoT-based soil and water sensors that remove the need for manual transects of field data and automatically update the farming calendar with real-time indications of growing conditions. Applications could also be expanded beyond paddy crops, which would allow for a whole farming community to view agronomic advice on a single digital platform, offering a seamless decision-support across all of agriculture in Sri Lanka.

Another exciting opportunity is to integrate blockchain technology to drive trust and traceability to buyers in export countries where transparency of production practices is part of the brand value. The system could be extended to include environmental sustainability of farming practices, and we could envisage monitoring for greenhouse gas emissions, or recommending climate-smart agricultural practices that have lower ecological impact, etc. In time the planner could become a smart agriculture platform that links farmers to markets and policymakers; thus reshaping the agricultural sector in Sri Lanka into a more efficient, profitable and technology-enabled industry.

4 PROJECT REQUIREMENTS

4.1 Functional requirements

- User input collection for location, soil type, and crop preferences
- Intelligent crop recommendation based on climate and soil data
- Seasonal planting and harvesting guidance
- Real-time weather integration for dynamic updates
- Fertilizer and irrigation schedule generation

4.2 Non-functional requirements

- High system performance
- Accuracy
- Scalability
- Strong security and data privacy
- User-friendly interface
- Maintainability

4.3 System requirements

Required software requirements to proposed system:

- Python – To implement the backend logic, data processing, and machine learning models.
- DSSAT Crop Simulation Model – To simulate crop growth under varying soil and climate conditions.
- Flask Server – To manage APIs

- React Native – To develop a cross-platform mobile application.
- GIS Tools (QGIS/ArcGIS APIs) – To integrate soil and land profiling with the recommendation system.
- Cloud Services (AWS / Azure / GCP) – For scalable data storage, weather API integration, and model deployment.

4.4 User Requirements

This system will be developed for several categories of users

1. New and Smallholder Farmers:
   Farmers will use the App to receive tailored recommendations about suitable paddy variety, planting time, irrigation planning and input requirements. They will also access profitability simulations and adaptive farming calendars to reduce uncertainty and make better decisions.

2. Agricultural Researchers and Extension Officers:
   The platform will be used by researchers and extension staff to examine crop suitability and recommendations based on market integration, and to review climate resilience scores. The platform will also enable them to offer more accurate advisory services and acquire regional-level information that supports agricultural planning.

3. Agricultural Cooperatives and Management Bodies:
   Management bodies and cooperatives will use the system to observe farm trends, monitor regional production, and align farmer production with market demand. They might also use simulations of profitability and guidance on resilience to support collective decisions and the sustainable production of crops.

4.5 WireFrames

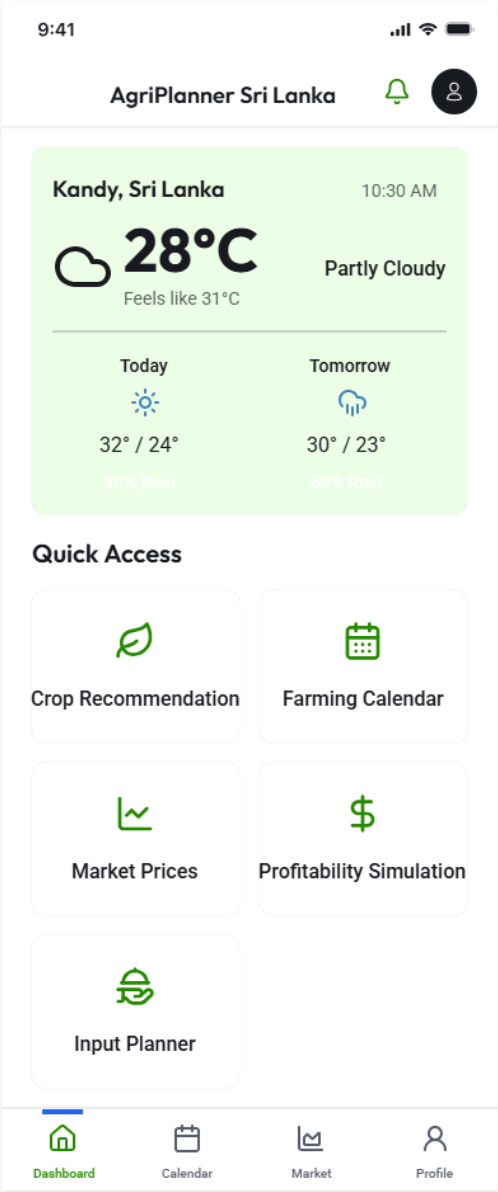

Figure 4.5-1 Dashboard

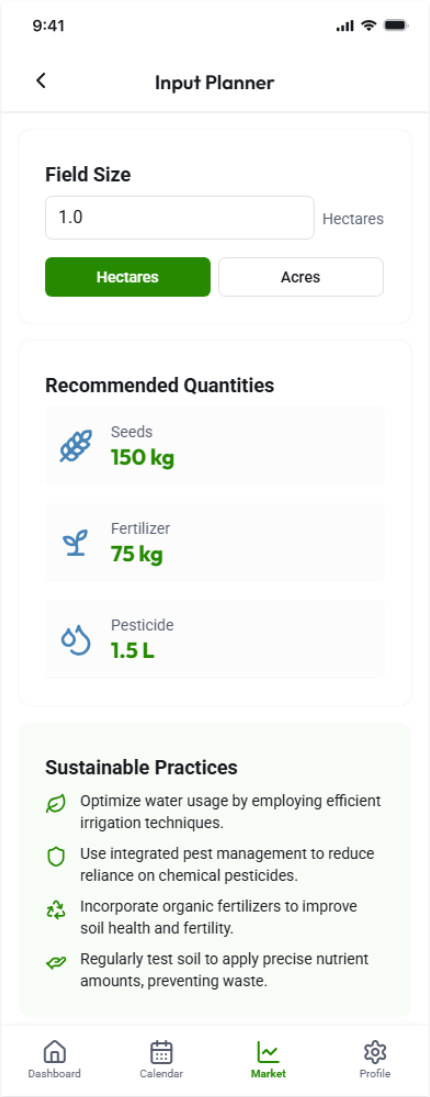

Figure 4.5-2 Input Planner

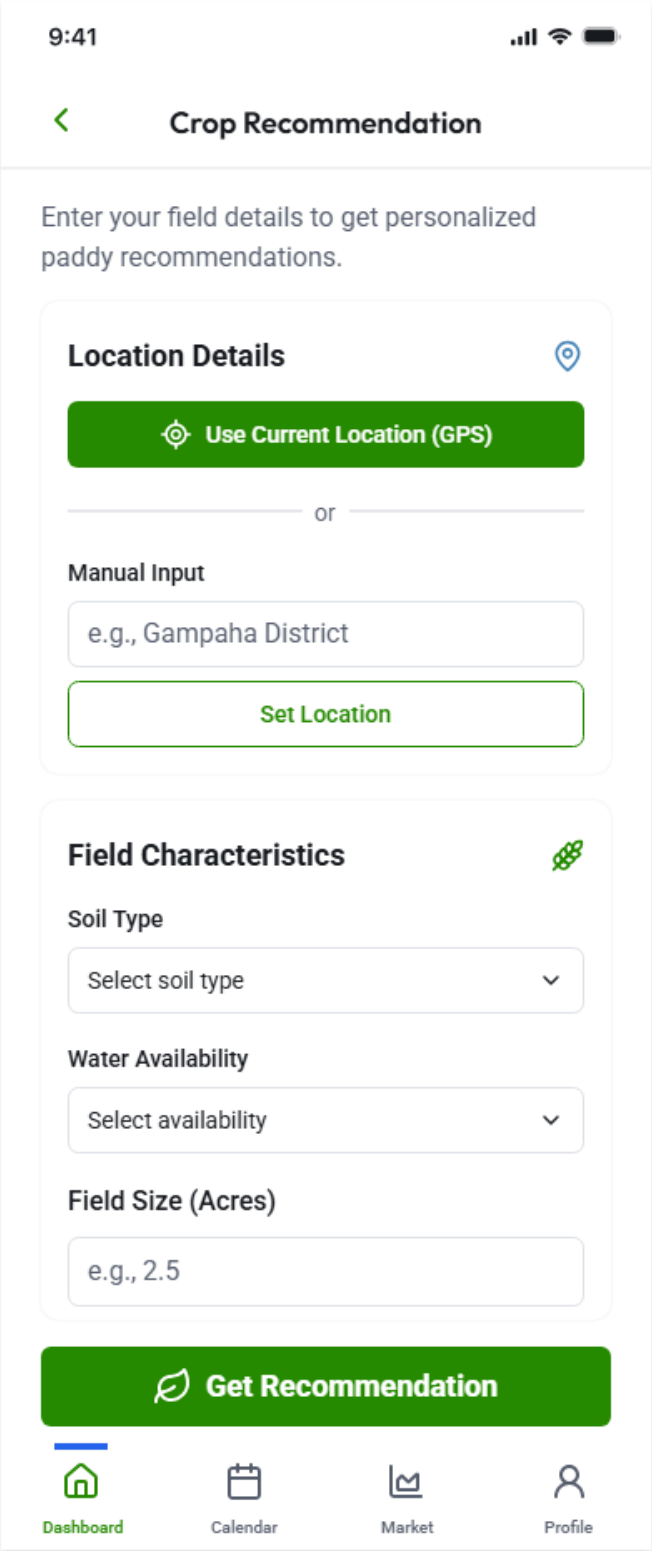

Figure 4.5-3 Crop Recommendation

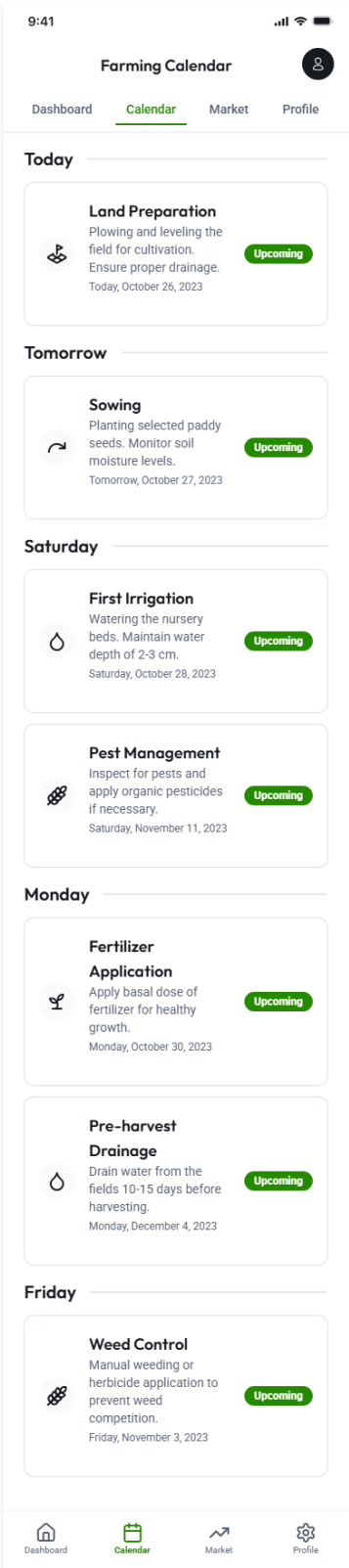

Figure 4.5-4 Farming Calander

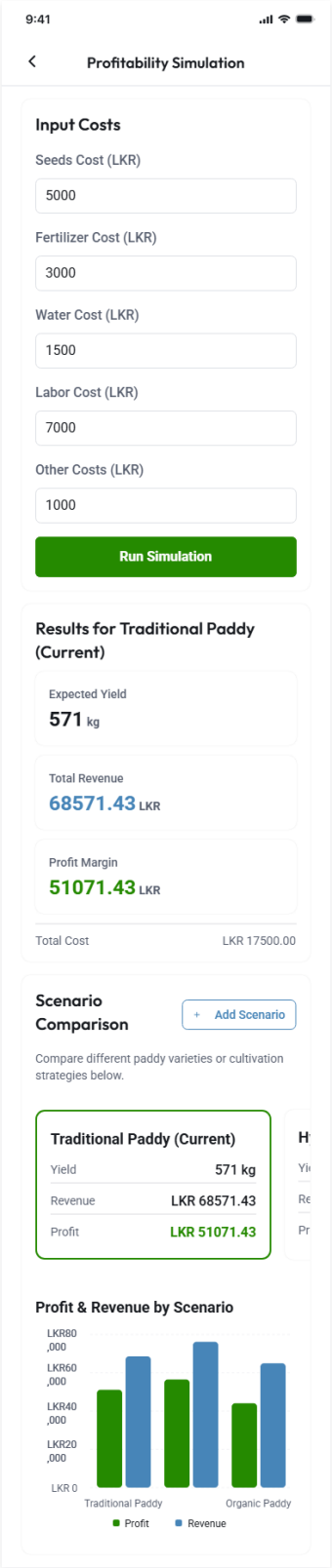

Figure 4.5-5 Profitability Simulation

5 GANTT CHART

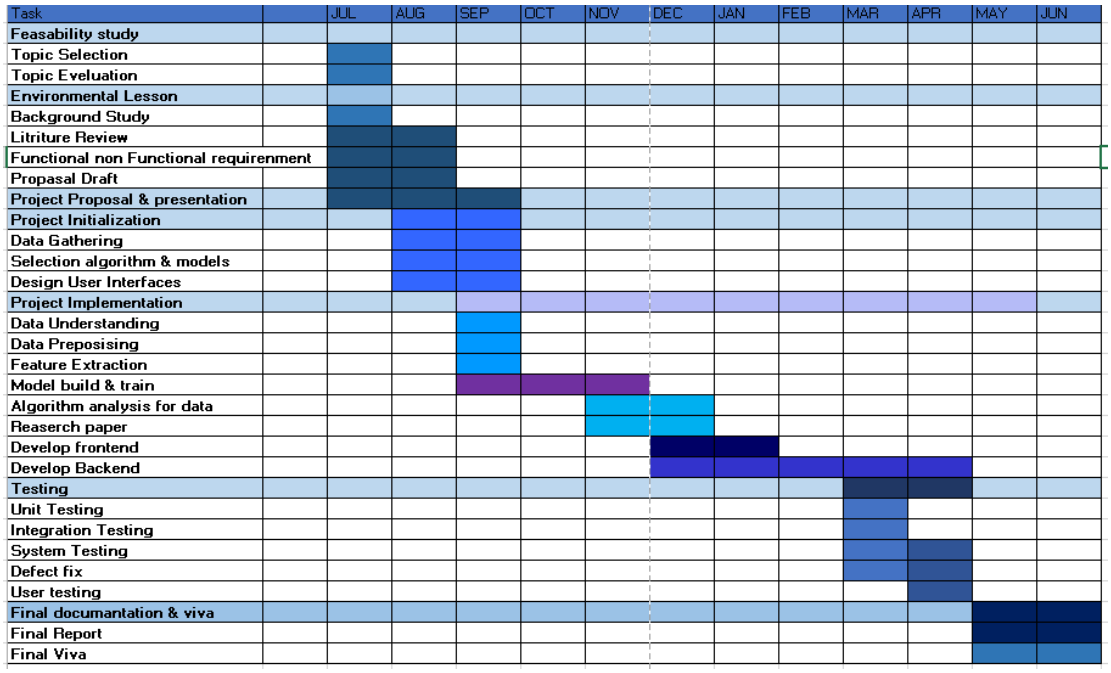

Figure 5-1

6 WORK BREAKDOWN CHART

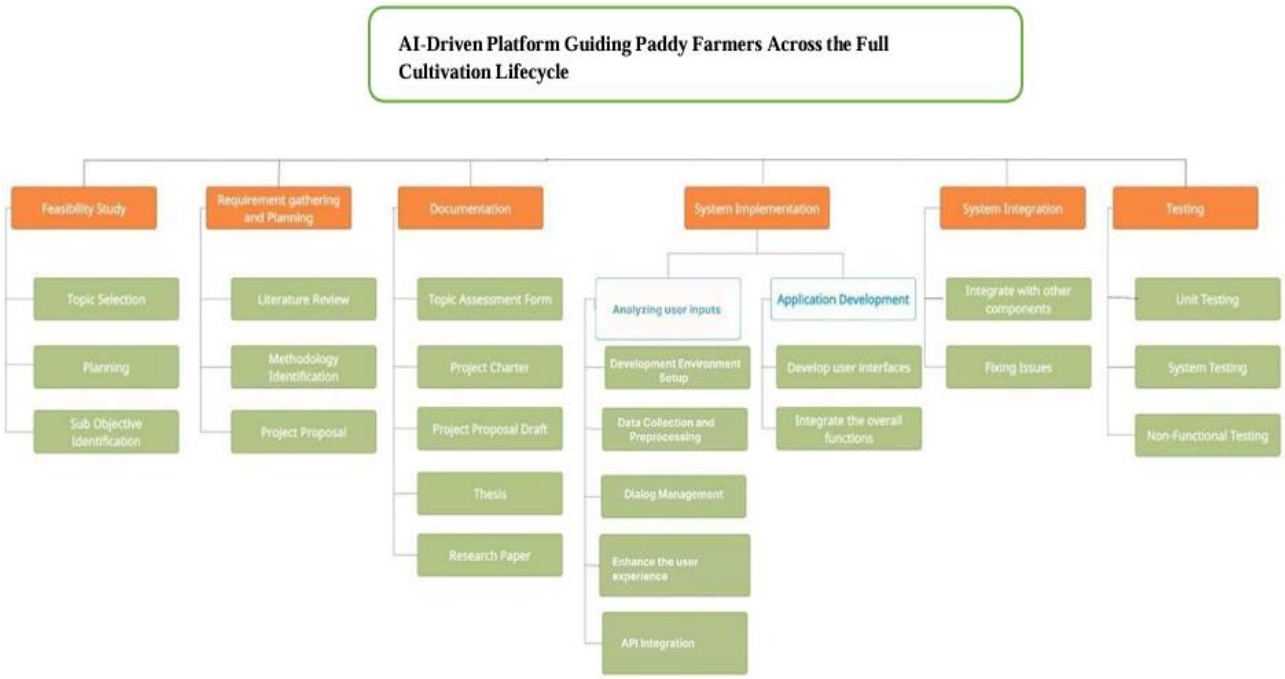

Figure 6-1

7 DESCRIPTION OF PERSONAL AND FACILITIES

Supervisor

Ms. Lokesha Weerasinghe

Senior Lecturer

Faculty of Computing | Information Technology

Sri Lanka Institute of Information Technology

Malabe

Co-Supervisor

Ms. Shalini Rupasinghe

Assistant Lecturer

Faculty of Computing | Software Engineering

Sri Lanka Institute of Information Technology

Malabe

External Supervisor

Mrs. Nandani Rupasinghe

Agriculture Research and Production Assistant

Department of Agrarian Development

Sri Lanka

8 BUDGET AND BUDGET JUSTIFICATION

For this research component, we do not aim to commercialize our individual components and the whole research will be commercialized as an application. Following is the budget justification for the whole research system.

Table 8-1 Budget Table

Description	Cost (LKR)
Travelling cost for field visit and data collection	20000.00
Development tools and license	10000.00
Backend Hosting	12000.00
Paper Publishing	10000.00
Total	52000.00

9 REFERENCES

[1] Food and Agriculture Organization of the United Nations (FAO), "Rice Market Monitor: Sri Lanka Overview," Rome, Italy, 2022. [Online]. Available: https://www.fao.org/publications. DOI: 10.4060/cc2470en

[2] World Bank, "Sri Lanka Agriculture and Rural Development," World Bank Data, 2023. [Online]. Available: https://data.worldbank.org/country/sri-lanka. DOI: 10.1596/978-1-4648-1801-2

[3] P. Bandara and S. De Silva, "Challenges faced by paddy farmers in Sri Lanka under climate change," *J. Agric. Sci. Sri Lanka*, vol. 15, no. 2, pp. 45–56, 2019. DOI: 10.4038/jas.v15i2.8567

[4] M. Ratnayake and K. Samarasinghe, "Effectiveness of agricultural extension services in Sri Lanka," *Asian J. Agric. Develop.*, vol. 18, no. 1, pp. 67–82, 2021. DOI: 10.37801/ajad2021.18.1.5

[5] J. Antle et al., "Transforming food systems with digital agriculture," *Nature Food*, vol. 1, pp. 380–381, 2020. DOI: 10.1038/s43016-020-0115-2

[6] A. Kamilaris and F. Prenafeta-Boldú, "Deep learning in agriculture: A survey," *Comput. Electron. Agric.*, vol. 147, pp. 70–90, 2018. DOI: 10.1016/j.compag.2018.02.016

[7] C. Jayasundara, "Limitations of ICT-based advisory systems in Sri Lankan farming communities," *Sri Lanka J. Rural Develop.*, vol. 10, no. 1, pp. 25–39, 2020. DOI: 10.4038/sljrd.v10i1.7823

[8] Food and Agriculture Organization of the United Nations (FAO) and International Telecommunication Union (ITU), "E-agriculture in Action: Drones, Big Data and AI," Bangkok, Thailand, 2019. [Online]. Available: https://www.fao.org/publications. DOI: 10.4060/ca4750en

[9] K. Pathiraja and H. Perera, "Adoption of precision agriculture tools among young Sri Lankan farmers," *Int. J. Agric. Technol.*, vol. 16, no. 3, pp. 111–123, 2020. DOI: 10.33687/ijat.016.03.3456

[10] Department of Census and Statistics, "Sri Lanka Agricultural Statistics 2021," Colombo, Sri Lanka, 2022. [Online]. Available: http://www.statistics.gov.lk. DOI: 10.4038/dcs.agri.2022.001

[11] R. De Alwis, "Impacts of climate variability on rice production in Sri Lanka," *Trop. Agric. Res.*, vol. 31, no. 2, pp. 23–34, 2020. DOI: 10.4038/tar.v31i2.8378

[12] S. Punchihewa, "Knowledge gaps among smallholder paddy farmers in Sri Lanka," *South Asian J. Agric. Res.*, vol. 8, no. 1, pp. 50–61, 2018. DOI: 10.3923/sajar.2018.50.61

[13] Japan International Cooperation Agency (JICA), "Sri Lanka Country Report on Agricultural Extension System," Colombo, Sri Lanka, 2021. [Online]. Available: https://www.jica.go.jp/publications. DOI: 10.11501/jica.2021.report.345

[14] M. Wickramasinghe, "Barriers to youth participation in agriculture in Sri Lanka," *Sri Lanka J. Develop. Stud.*, vol. 22, no. 1, pp. 55–73, 2019. DOI: 10.4038/sljds.v22i1.7654

[15] Food and Agriculture Organization of the United Nations (FAO), "Climate-Smart Rice Production in South Asia: Case Studies from Sri Lanka," Rome, Italy, 2021. [Online]. Available: https://www.fao.org/publications. DOI: 10.4060/cb4578en

[16] J. W. Jones et al., "The DSSAT cropping system model," *Eur. J. Agron.*, vol. 18, no. 3–4, pp. 235–265, 2003. DOI: 10.1016/S1161-0301(02)00107-7

[17] A. Rahman and M. Mishra, "Integrating market price forecasting into crop advisory services: Lessons from South Asia," *Agric. Econ. Rev.*, vol. 42, no. 2, pp. 89–105, 2020. DOI: 10.22004/ag.econ.304576

[18] S. Priyadarshani and G. Fernando, "Machine learning approaches for soil fertility classification in Sri Lanka," *Int. J. Comput. Appl. Agric.*, vol. 7, no. 1, pp. 30–38, 2021. DOI: 10.5120/ijcaa2021040601

[19] J. Liakos, P. Busato, D. Moshou, S. Pearson, and D. Bochtis, "Machine learning in agriculture: A review," *Sensors*, vol. 18, no. 8, 2674, 2018. DOI: 10.3390/s18082674

[20] S. Dorosh et al., "ICT for Climate-Smart Agriculture in South Asia," Washington, DC, USA: World Bank, 2019. [Online]. Available: https://openknowledge.worldbank.org. DOI: 10.1596/32200

[21] ICT Agency of Sri Lanka (ICTA), "Digital Agriculture Transformation Strategy 2021–2026," Colombo, Sri Lanka, 2021. [Online]. Available: https://www.icta.lk/publications. DOI: 10.4038/icta.strategy.2021.001

[22] K. Munasinghe and R. Abeysekara, "Limitations of generalized crop advisories in Sri Lanka's rice sector," *J. Agric. Ext. Asia*, vol. 19, no. 4, pp. 88–102, 2021. DOI: 10.33687/jaea.019.04.3421

[23] Food and Agriculture Organization of the United Nations (FAO), "Digital Agriculture: A Regional Perspective for Asia-Pacific," Bangkok, Thailand, 2020. [Online]. Available: https://www.fao.org/publications. DOI: 10.4060/ca8797en

[24] R. Wijesuriya and L. Gamage, "Adoption of GIS in agricultural planning in Sri Lanka: A case study," *GISci. Remote Sens.*, vol. 58, no. 5, pp. 625–639, 2021. DOI: 10.1080/15481603.2021.1924302

[25] B. Jayasinghe, "Market volatility and risk in paddy farming: Evidence from Sri Lanka," *Sri Lanka J. Econ. Stud.*, vol. 14, no. 2, pp. 33–49, 2019. DOI: 10.4038/sljes.v14i2.7892

[26] United Nations Development Programme (UNDP) Sri Lanka, "Smallholder Farmers in Sri Lanka: Challenges and Opportunities," Colombo, Sri Lanka, 2022. [Online]. Available: https://www.undp.org/publications. DOI: 10.18356/undp.sl.2022.001

10 APPENDICES
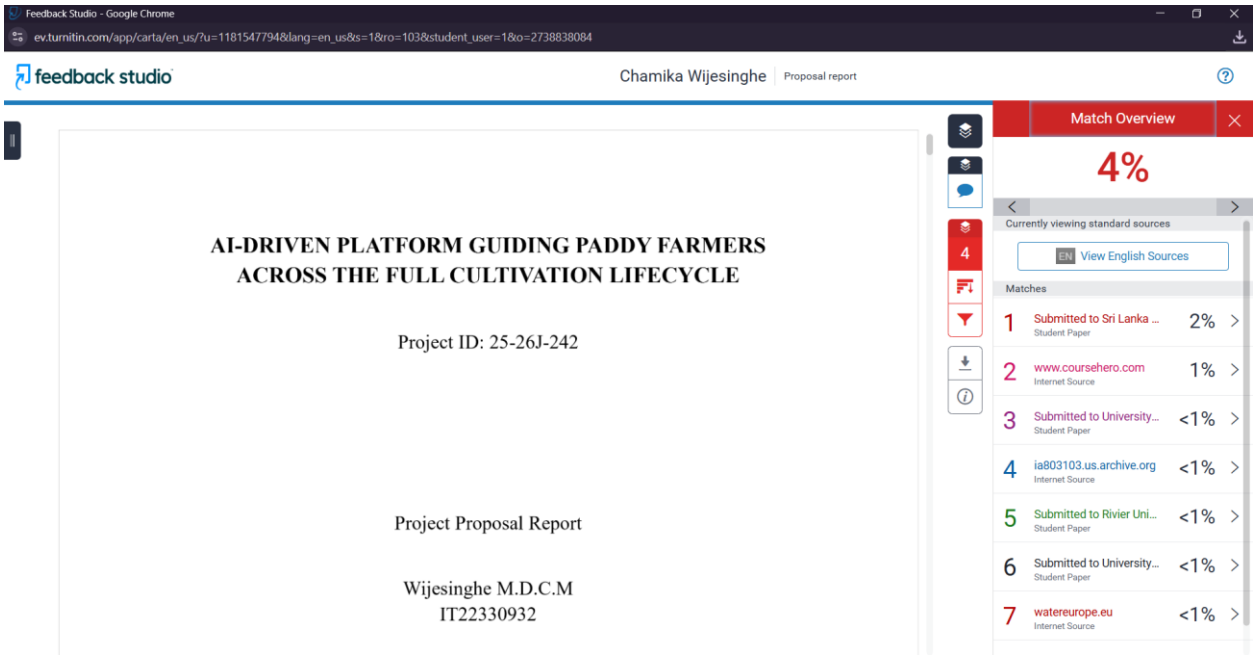
Appendix A: Plagiarism Report